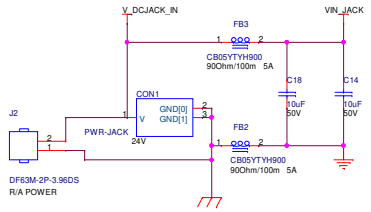

SH4, SH5 bypass U40 and U41 when Vin is a sigle source (Adapter or POE)

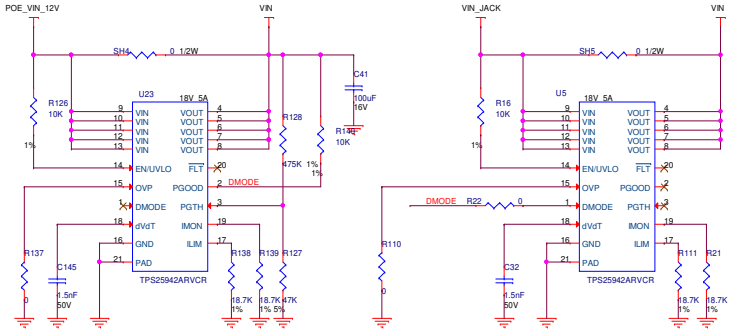

3V3/6A powers the M.2 and Mini-PCIe modules

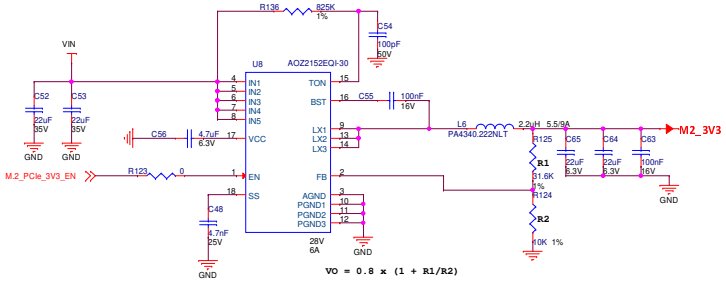

5V/6A powers the SOM and USB power out

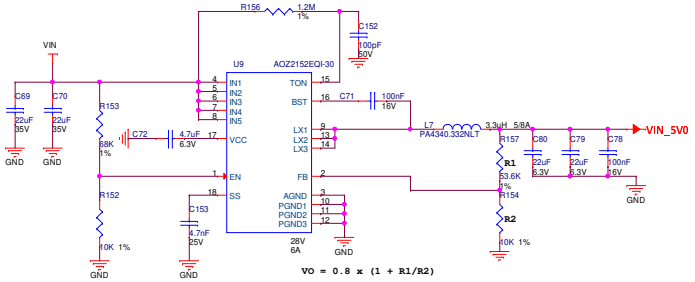

SolidRun
Copyright (c) 2014 SolidRun ltd.
Released under Creative Commons Attribution 3.0 Unported License
All Rights Reserved

Size	Title	Rev
C	POWER	2.2.0

Date: November 21, 2019 Sheet 01 of 10

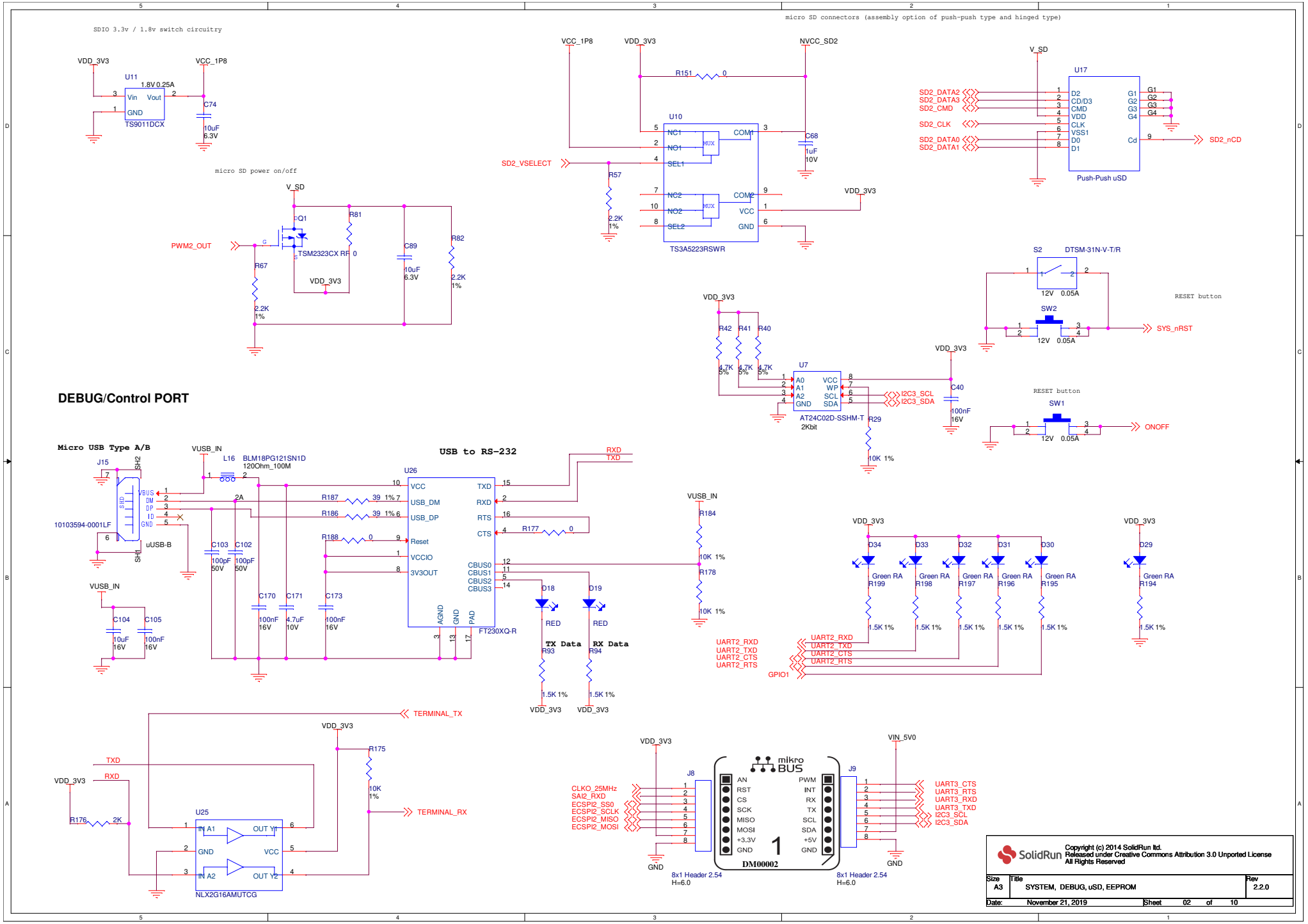

Copyright (c) 2014 SolidRun ltd.
Released under Creative Commons Attribution 3.0 Unported License
All Rights Reserved

Size	Title	Rev
A3	SYSTEM, DEBUG, uSD, EEPROM	2.2.0

Date: November 21, 2019 Sheet 02 of 10

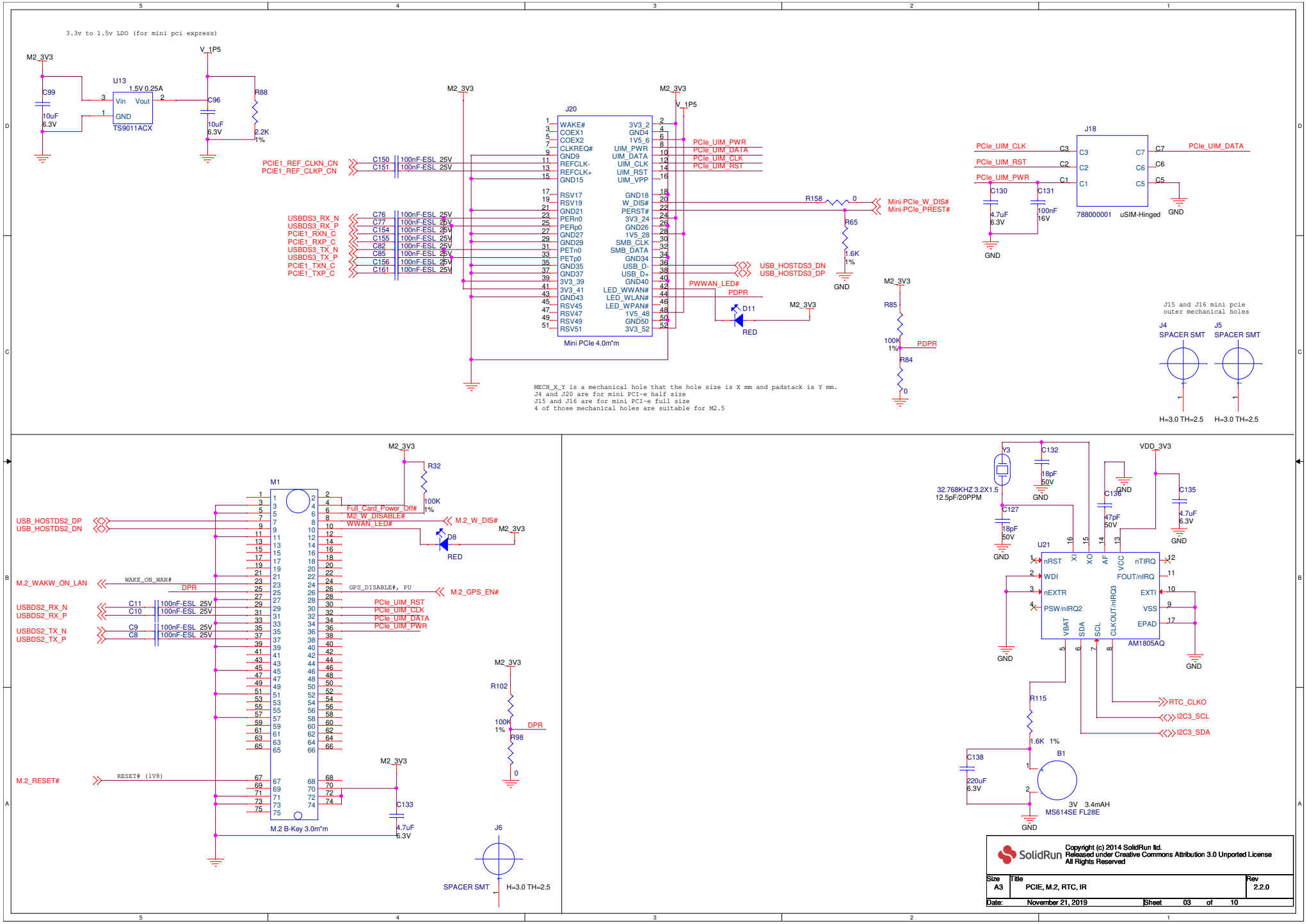

Copyright (c) 2014 SolidRun ltd.
Released under Creative Commons Attribution 3.0 Unported License
All Rights Reserved

Size	Title	Rev
A3	PCIE, M.2, RTC, IR	2.2.0

Date: November 21, 2019 Sheet 03 of 10

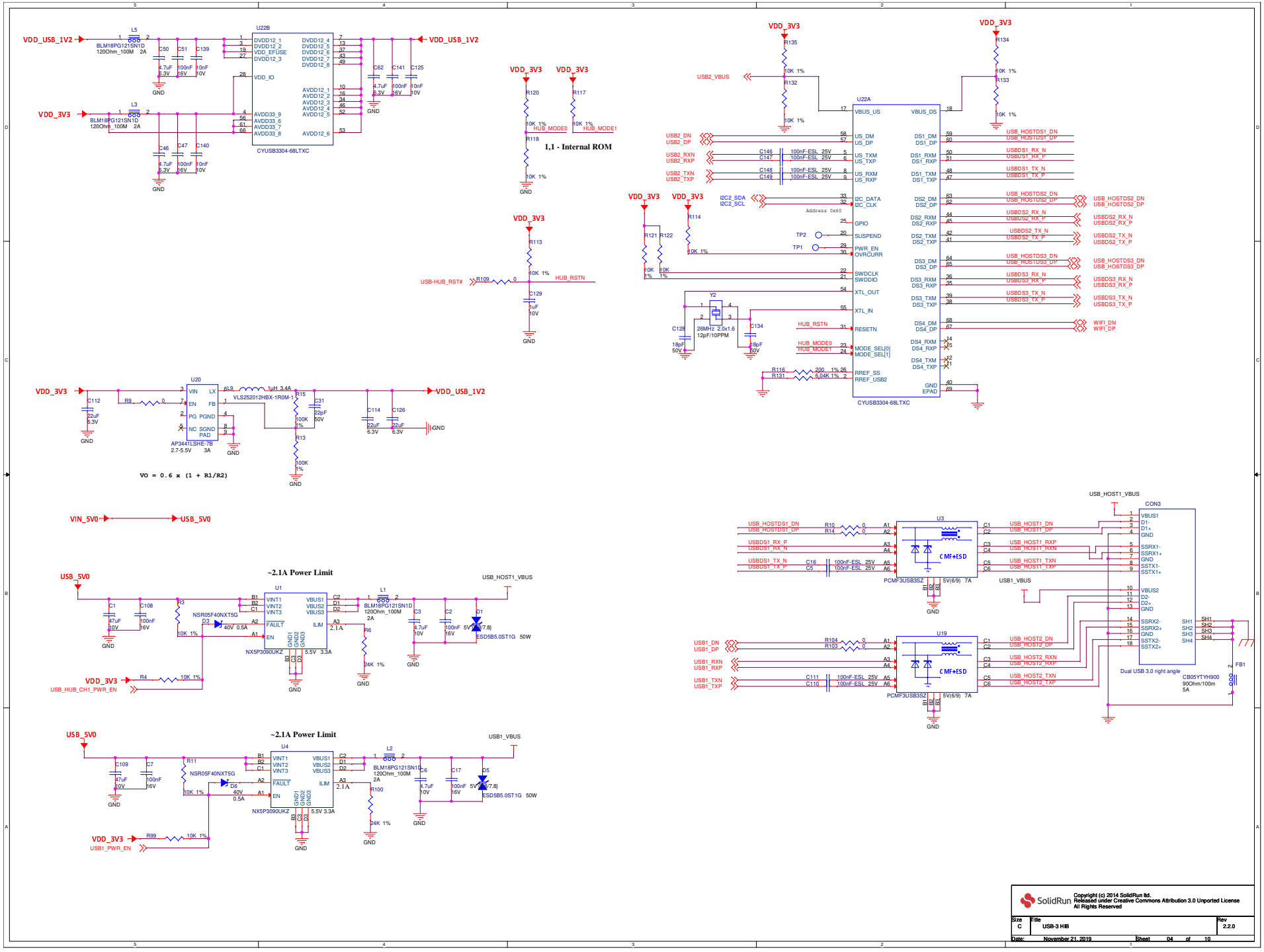

SolidRun
Copyright (c) 2014 SolidRun ltd.
Released under Creative Commons Attribution 3.0 Unported License
All Rights Reserved

Size	Title	Rev
C	USB-3 HIB	2.2.0

Date: November 21, 2019 Sheet 04 of 10

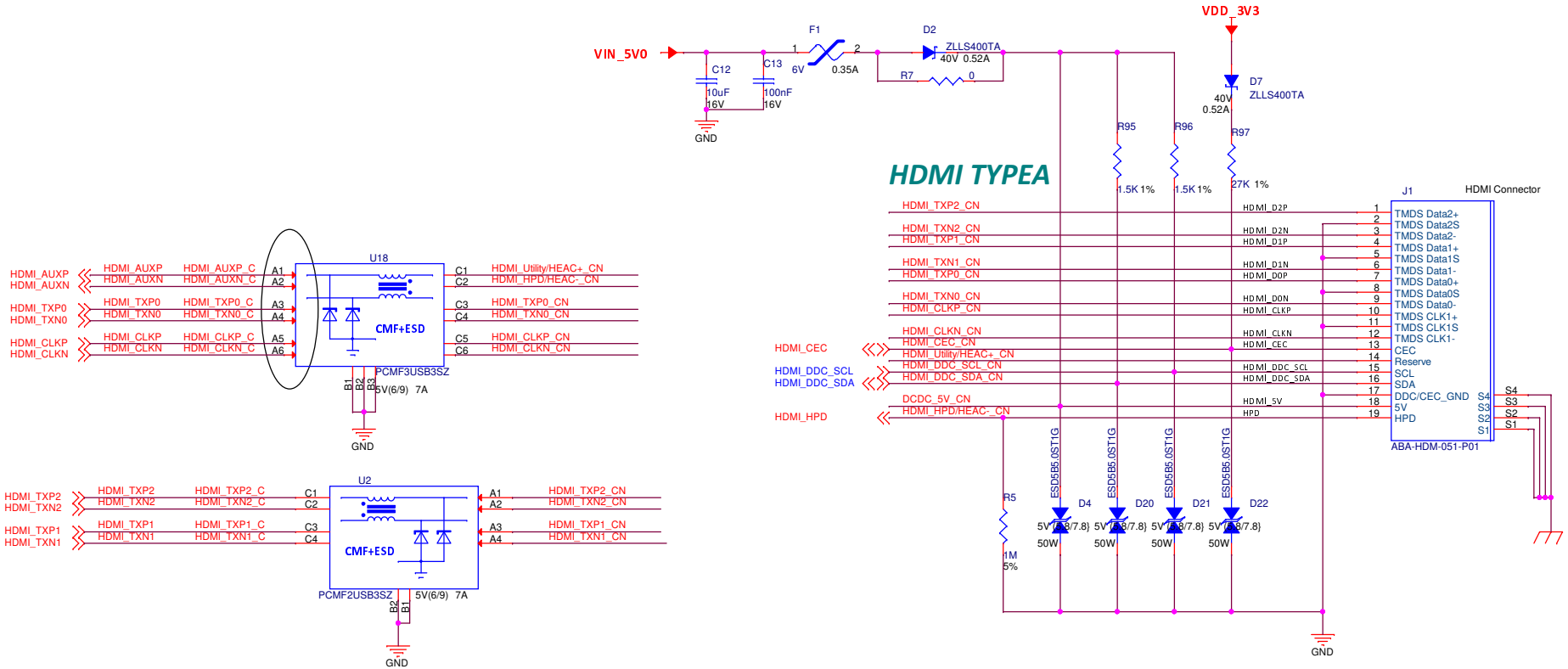

Copyright (c) 2014 SolidRun ltd.
Released under Creative Commons Attribution 3.0 Unported License
All Rights Reserved

Size	Title	Rev
B	HDMI	2.2.0

Date: November 21, 2019 Sheet 05 of 10

Audio DAC

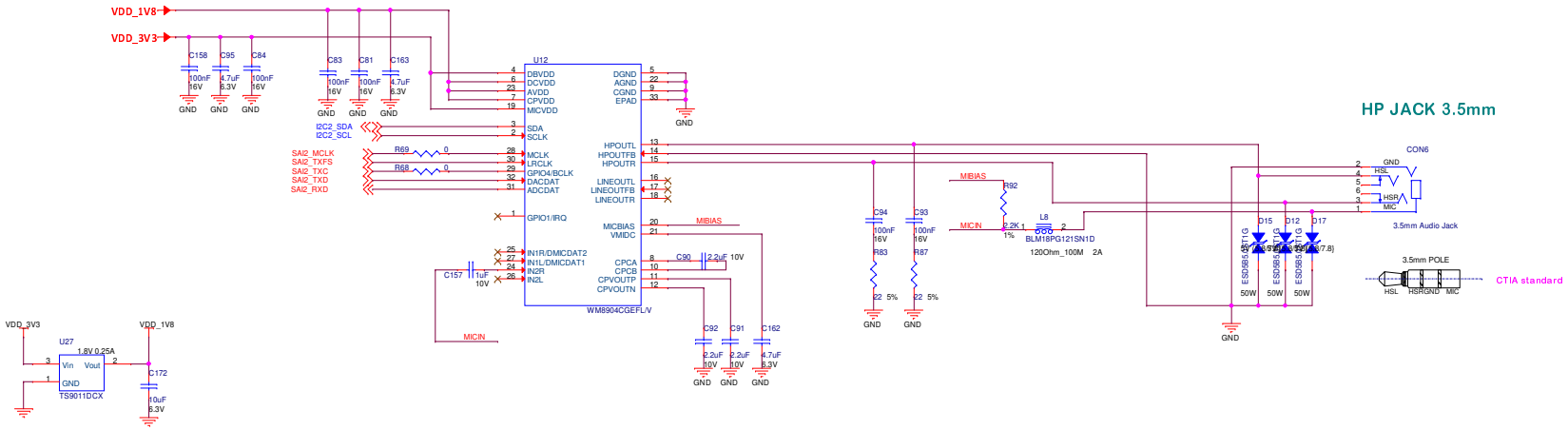

SolidRun
Copyright (c) 2014 SolidRun ltd.
Released under Creative Commons Attribution 3.0 Unported License
All Rights Reserved

Size	Title	Rev
C	AUDIO	2.2.0

Date: November 21, 2019 Sheet 06 of 10

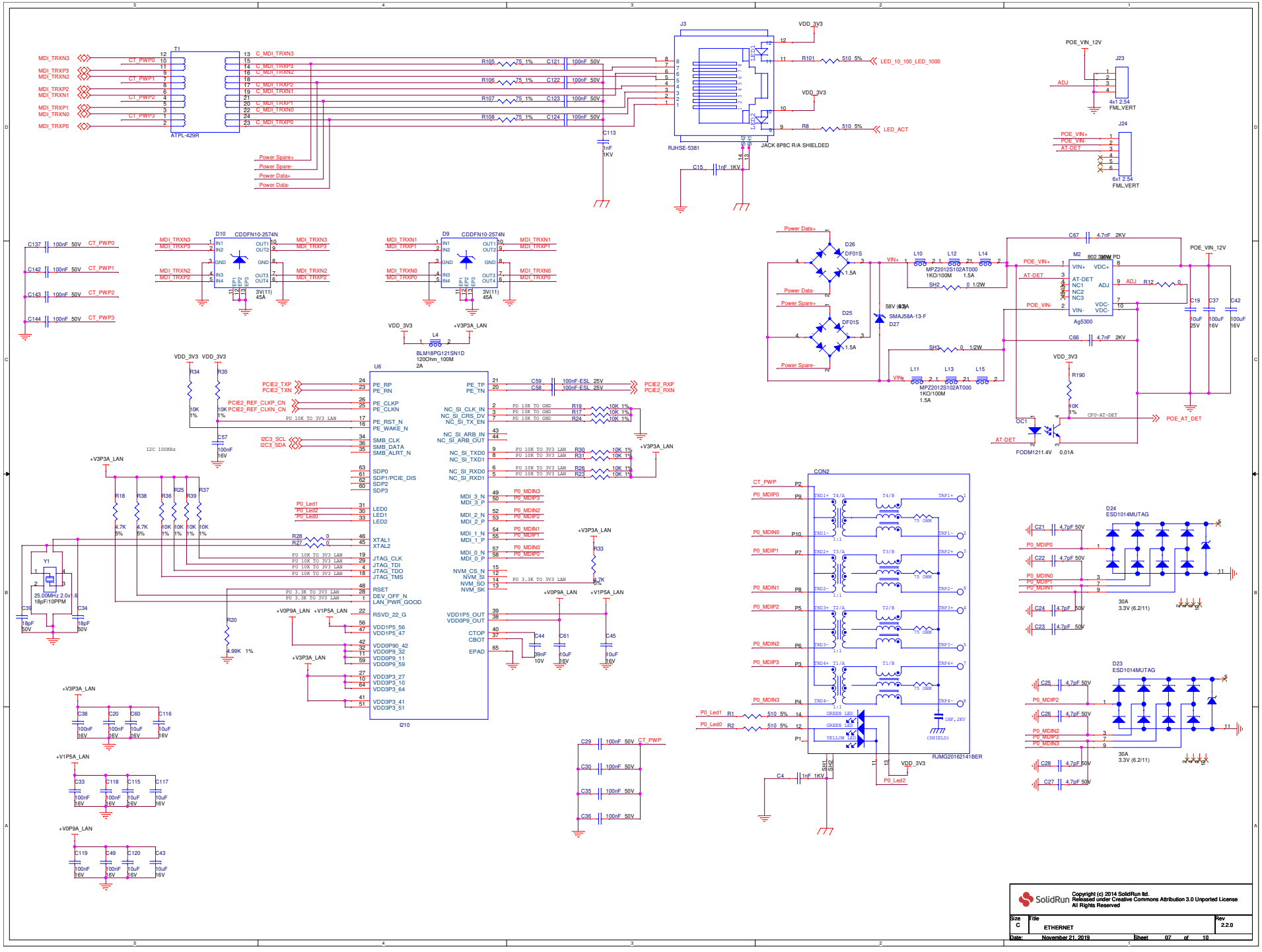
T1
ATPL-429R
J3
RJHSE-5381
JACK 8P8C R/A SHIELDED
VDD_3V3
LED_10_100_LED_1000
LED_ACT
POE_VIN_12V
J23
4x1 2.54
FML_VERT
J24
6x1 2.54
FML_VERT
D10
CDDFN10-2574N
D9
CDDFN10-2574N
3V(11)
45A
L4
BLM18PG121SN1D
120Ohm_100M
2A
U6
I210
+V3P3A_LAN
+V0P9A_LAN
+V1P5A_LAN
Y1
25.00MHz 2.0x1.6
18pF/10PPM
I2C 100KHz
D26
DF01S
D25
DF01S
D27
SMAJ58A-13-F
58V (63)
M2
802.3af/at PD
Ag5300
OC1
FODM1211.4V 0.01A
CON2
RJMG20162141BER
D24
ESD1014MUTAG
D23
ESD1014MUTAG
30A
3.3V (6.2/11)
Copyright (c) 2014 SolidRun ltd.
Released under Creative Commons Attribution 3.0 Unported License
All Rights Reserved
Size C
Title ETHERNET
Rev 2.2.0
Date: November 21, 2019
Sheet 07 of 10

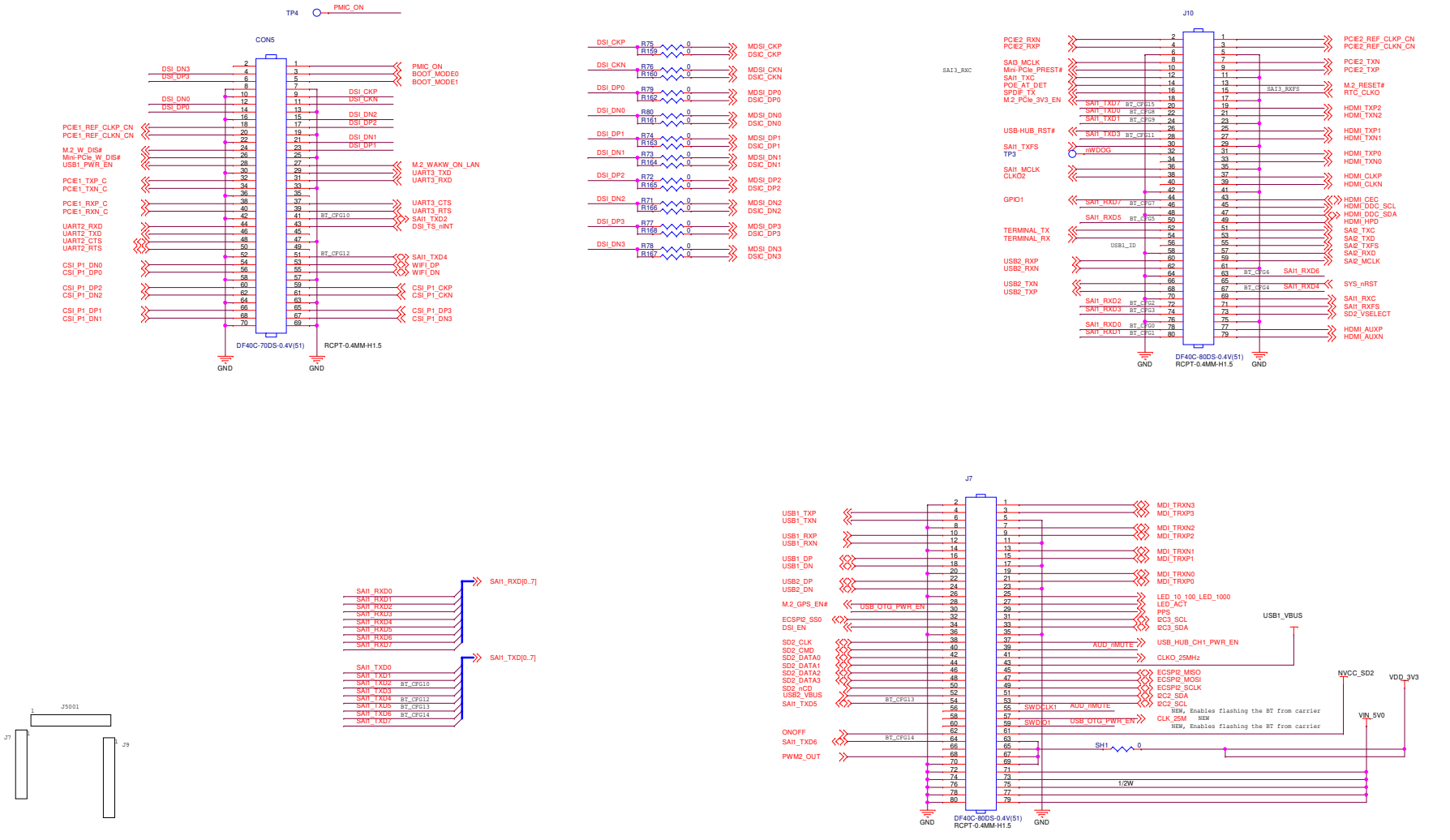

MECH_X_Y is a mechanical hole that the hole size is X mm and padstack is Y mm.
J15, J16 and J17 are M2.5
J18, J19 and J27 are M1.8
J27 is a new mechanical hol for MicroSOM rev 1.4 and newer

SolidRun
Copyright (c) 2014 SolidRun ltd.
Released under Creative Commons Attribution 3.0 Unported License
All Rights Reserved

Size	Title	Rev
C	B-T-B CONNECTORS	2.2.0

Date: November 21, 2019 Sheet 08 of 10

EXP CN

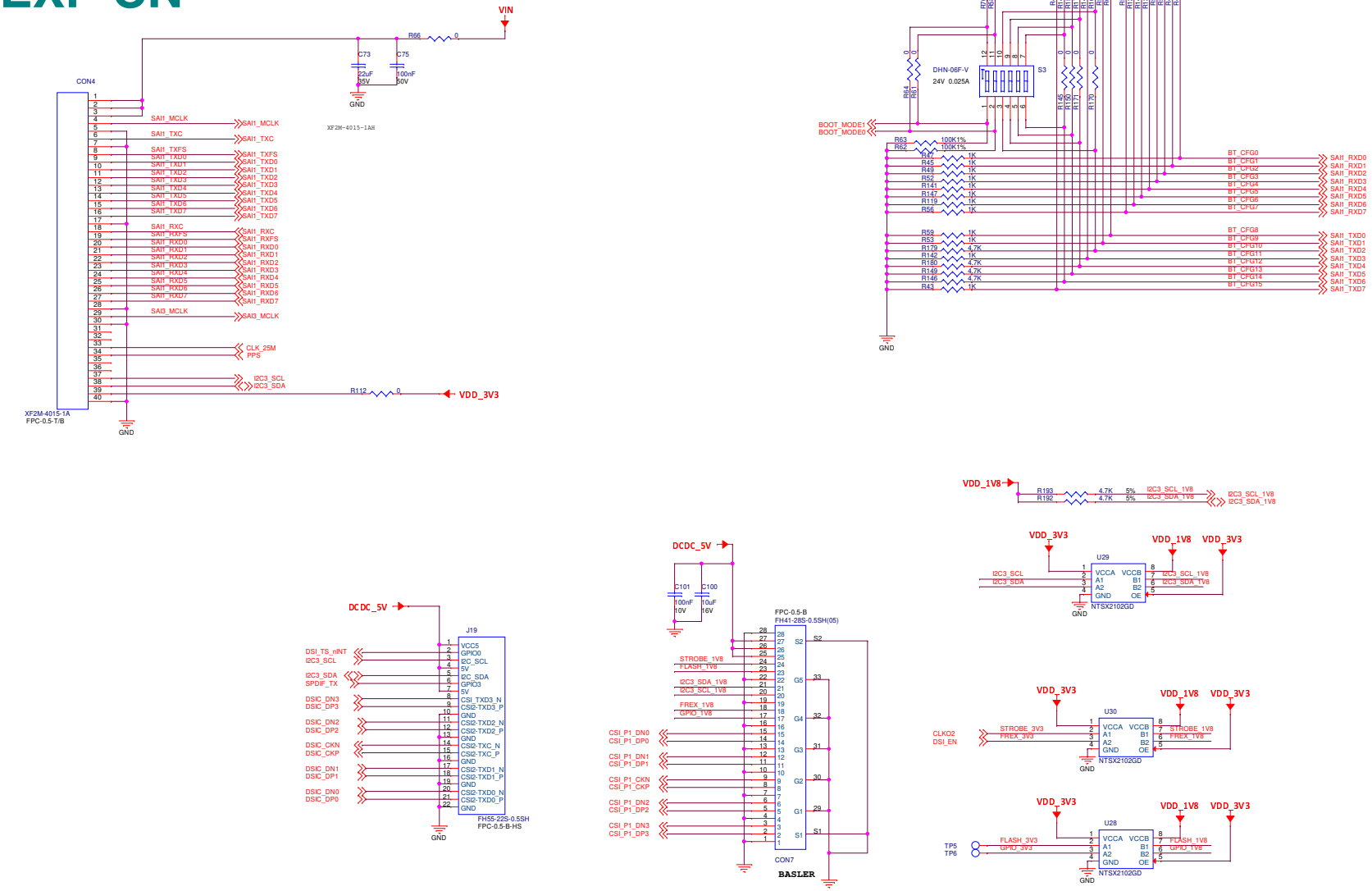

SolidRun
Copyright (c) 2014 SolidRun ltd.
Released under Creative Commons Attribution 3.0 Unported License
All Rights Reserved

Size	Title	Rev
C	BOOT, EXP	2.1.3

Date: November 21, 2019 Sheet 9 of 10

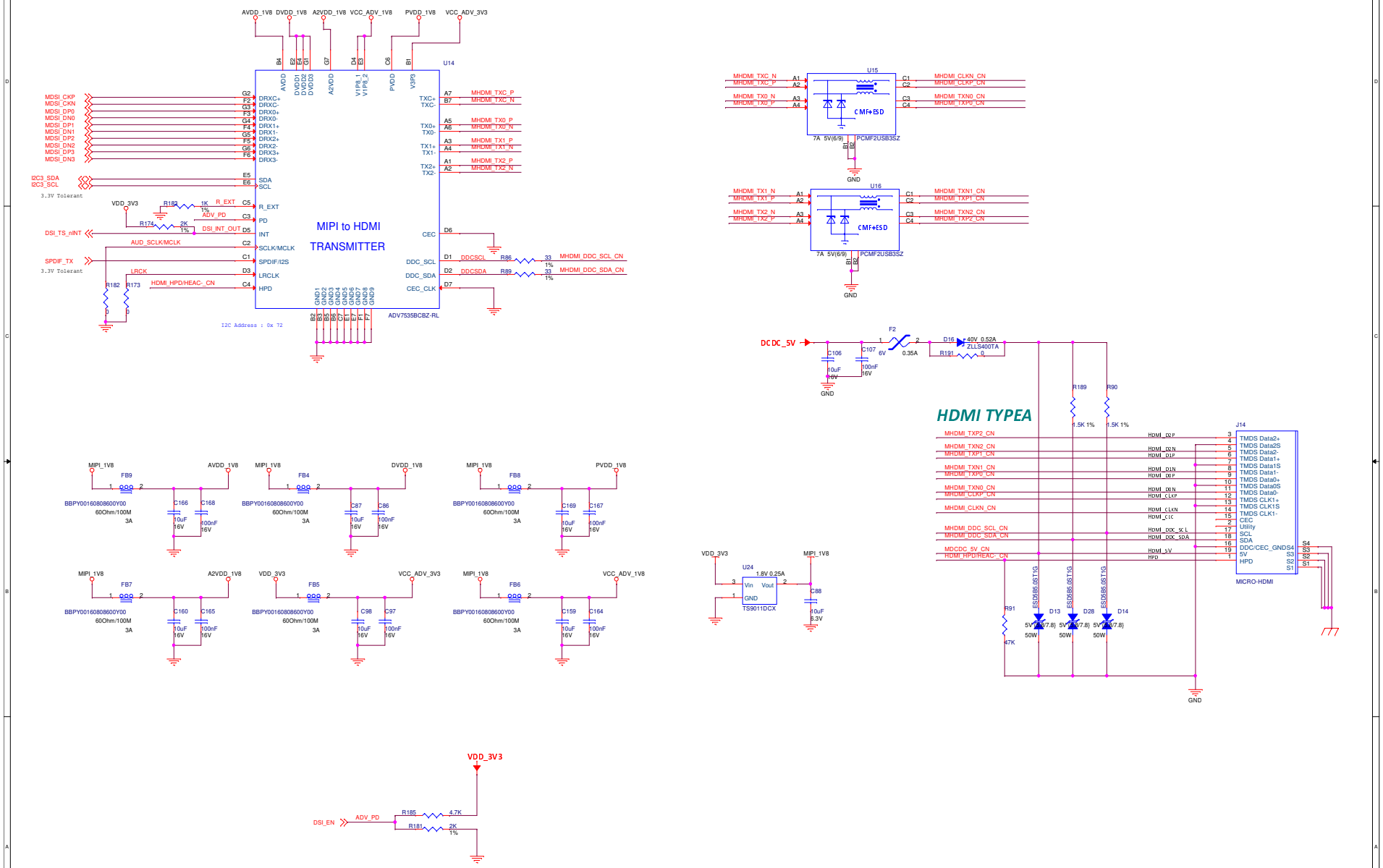

Copyright (c) 2014 SolidRun ltd.
Released under Creative Commons Attribution 3.0 Unported License
All Rights Reserved

Size	Title	Rev
C	MIPI-DSI to HDMI	2.3.1

Date: December 30, 2019 Sheet 10 of 10

Rev. 1.0	Prototype Version
Rev. 2.0	1. Change R257 from 0 Ohm to 100K 2.Adding C297 a 4.7uF on USB Debug 3. Change J35 Routing 4. R23 is assembled instead of R25 to support standalong USB HUB mode 5. Connecting VIN_5V0 to DCDC_5V 6. Cahnging the Power load switch to TPS25942A to support reverse power blocking 7. Changing J5001, J7 and J9 routing to support the new IMX-8 SOM 8. Change the Audio CODEC to WM8904 to suppor IN/OUT 9. Change Y4 from 27MHz to 25MHz
Rev. 2.1	1. Adding R373 and R374 0 Ohm to pull OVP input down for U40 and U41. Taking U37 and U38 out of the BOM and change revision to 2.1.3
Rev. 2.2	New features product
Rev. 2.3	1. Fixing I2C routing on U14 2. Fixing symbols errors on layout - U8, U9 and CON7 3. Changing OC1 position to enable POE module assembly on print side
Rev. 2.3.1	1. R185 is not assembeled

SolidRun
Copyright (c) 2014 SolidRun ltd.
Released under Creative Commons Attribution 3.0 Unported License
All Rights Reserved

Size	Title	Rev
A	HISTORY	2.3.1

Date: December 30, 2019 Sheet 11 of 11