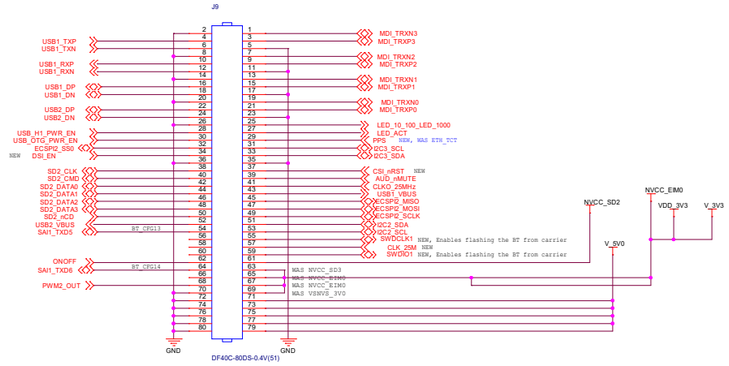

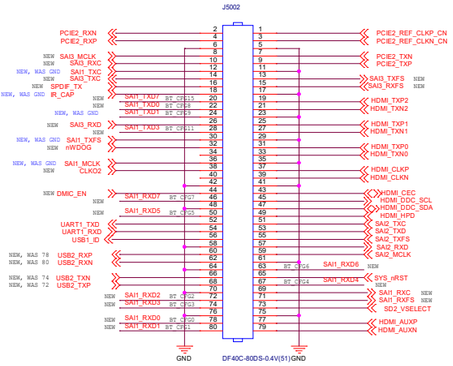

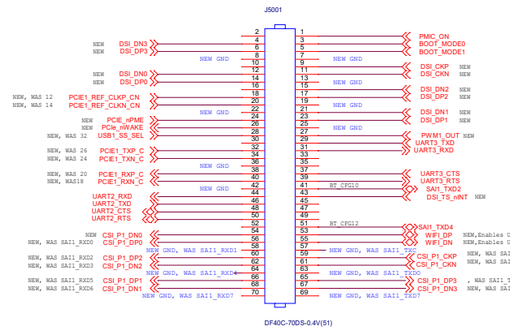

Lower/Upper mechanical

Reset button

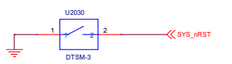

Ublox firmware flashing IOs
This is SOM to SOM connectivity to flash Ublox firmware

PMIC Test points

Front red LED

Boot select

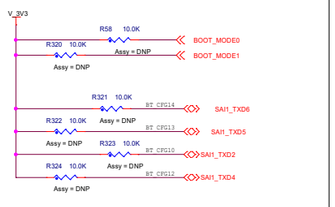

Boot select complimentary
Those are not used

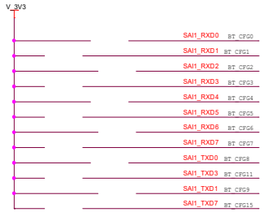

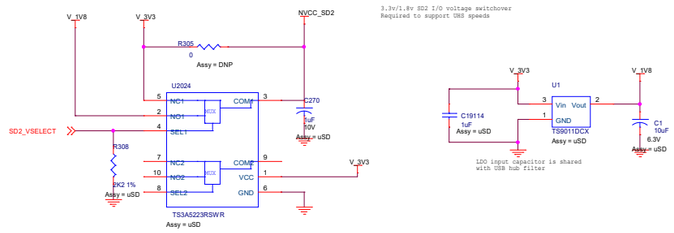

IR Receiver

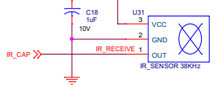

RTC Circuit -
Different battery options - two rechareable lithium and one supercap
Two different EPSON modules

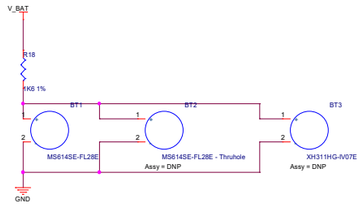

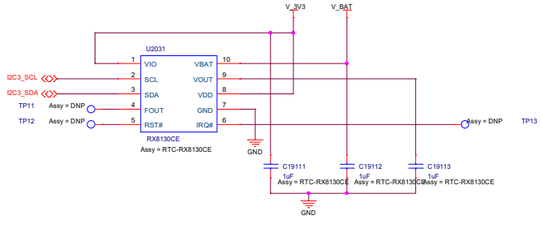

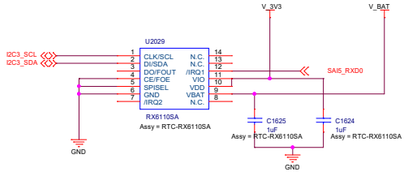

Dual USB 3.0 connector with current limiting

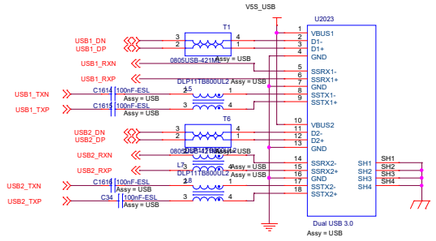

USB1 ID can be set by software; but for easier integration it is set as pull-down indicating host

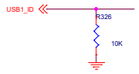

Notice the addition of more capacitance on the output C441 and C442.
This comes to assist when using external mechanical devices.
The issue that was observed is high swing on VBus when
using external USB CD-ROM/DVD.

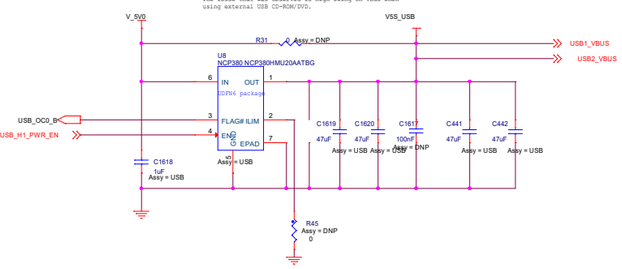

12v (up to 19v) to 5v

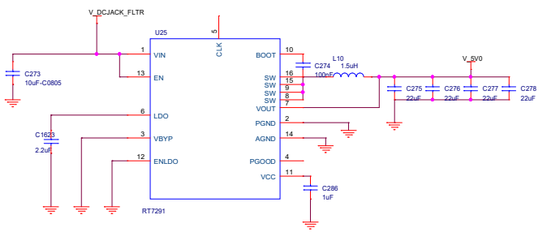

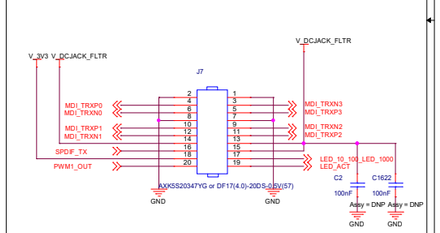

micro SD power on/off
Change C85 to be 1uF instead of 10uF to prevent in-rush

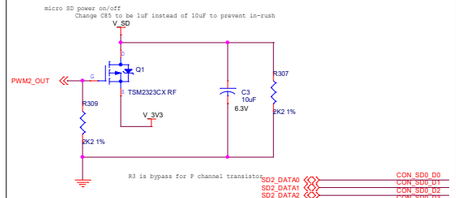

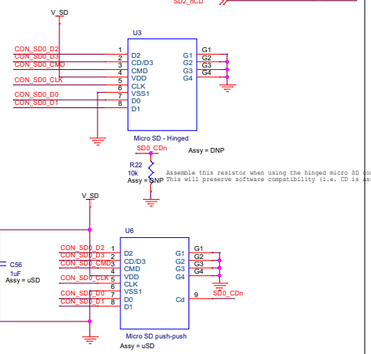

9v to 3.3v
This is preparation if the same board will be used for i.MX6 based SOM where 3.3v is generated from the carrier.

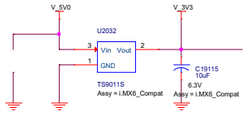

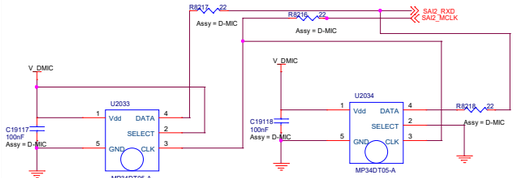

Digital Microphone power enable.
This will enable amber light on the front panel so users will know that the DMICs are ON.

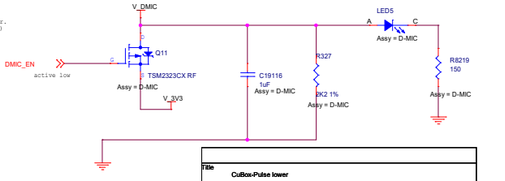

Title: CuBox-Pulse lower			
Size: A1	Document Number: <Doc>		Rev: 1.1
Date: Thursday, July 23, 2020	Sheet 1 of 2		

HDMI Connector, ESD and CEC isolation

HDMI data EMI/ESD

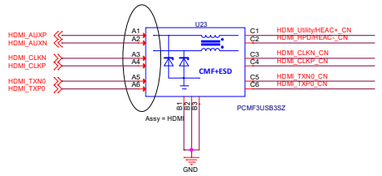

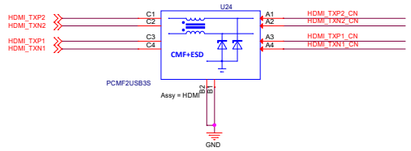

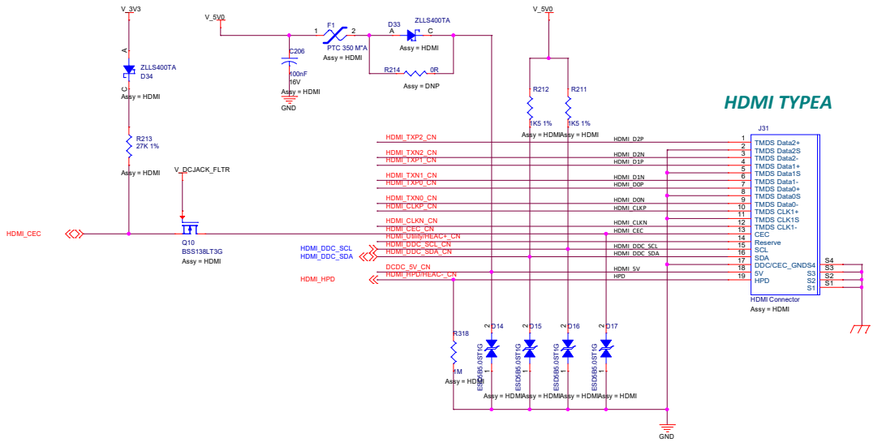

HDMI TYPEA

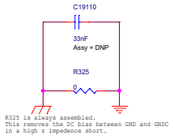

R325 is always assembled.
This removes the DC bias between GND and GNDC
in a high z impedence short.

FTDI based micro USB to serial console

microUSB to UART

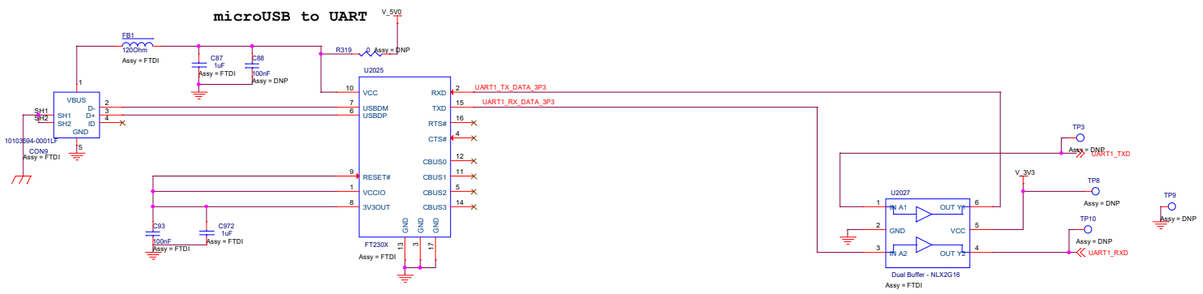

Title	CuBox-Pulse lower	
Size A1	Document Number <Doc>	Rev 1.1
Date: Thursday, July 23, 2020	Sheet 2 of 2	